EBI 100 Precision Data Loggers

With the EBI 100 data loggers, ebro offers reliable measurement devices for routine control according to German guidelines and ISO 15883.

The precision data loggers are available in different versions including temperature or temperature / pressure loggers with and without external probes. They record the temperature and pressure variation over time during the washer-disinfector or sterilizer process and can easily be read out on a computer using the Winlog.med software. This software will make the test evaluation easy, and automatically calculates the A_0 value.

Applications:

- Routine control of steam sterilizers
- Routine control of washer-disinfectors and washer-disinfectors for endoscopes

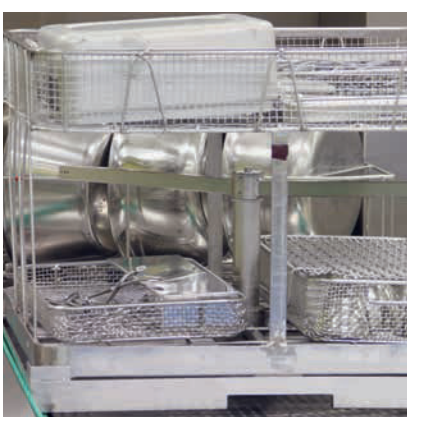

Integrated sensor

Rigid metal probe

Bendable metal probe

Luer-Lock connection

Tube connection

General technical specifications: valid for all EBI 100 Data Loggers*

Accuracy: Temperature	±0.3 °C
Resolution: Temperature	0.1 °C
Accuracy: Pressure (only pressure data loggers)	±20 mbar
Resolution: Pressure (only pressure data loggers)	1 mbar
Sensor: Temperature	Pt 1000, internal
Sensor: Pressure (only pressure data loggers)	Piezo resistive pressure sensor (temperature compensated)
Sampling rate	1 sec to 24 hours
Measurement mode	• Endless measurement • Measurement start / stop time • Measurement immediately until end of memory • Measurement from start time
Operating temperature	**EBI 100-T100:** -40 °C ... +150 °C **EBI 100-T101:** -85 °C ... +85 °C
Storage temperature	-40 °C … +70 °C
Battery	Lithium cell 3,6 V replaceable
Battery lifetime	Up to 2 years, depending on measurement interval and operating temperature (**EBI 100-T101**: only 100 hours at -85 °C / -121 °F)
Dimensions (L x W x H)	48 x 48 x 24 mm**
Weight	Approximately 70 g**
Housing material	Stainless steel (V4a), PEEK
Protection class	IP 68 (-30 °C … +150 °C / -22 °F … +302 °F)
Certificate	Factory calibration certificate

** Please find the exact technical data of each EBI 100 logger type on the next pages.*
*** Dimensions and weight just refer to the EBI 100 housing.*

EBI 100-T10x (Low) Temperature Data Logger
Integrated sensor

EBI 100-T100

Technical Data

Measurement range	EBI 100-T100: -40 °C ... +150 °C (-40 °F ... +302 °F) EBI 100-T101: -85 °C ... +85 °C (-121 °F ... +185 °F)
Data memory	27,000 measurement values

- 1 internal temperature sensor, Pt 1000

Type	Description	Part No.
EBI 100-T100	Temperature Data Logger, 1-port, internal	1340-6500
EBI 100-T101	Low Temperature Data Logger, 1-port, internal	1340-6501

EBI 100-T21x Temperature Data Logger
Rigid metal probe

EBI 100-T210

Technical Data

Measurement range	-40 °C ... +150 °C (-40 °F ... +302 °F)
Data memory	27,000 measurement values

- 1 external temperature sensor, radial, pointed, Ø 3 mm

Type	Description	Part No.
EBI 100-T210	Temperature logger, 1-channel, L = 50 mm	1340-6502
EBI 100-T211	Temperature logger, 1-channel, L = 75 mm	1340-6503

EBI 100-T23x Temperature Data Logger
Rigid metal probe

EBI 100-T230

Technical Data

Measurement range	-40 °C ... +150 °C (-40 °F ... +302 °F)
Data memory	27,000 measurement values

- 1 external temperature sensor, axial, pointed, Ø 3 mm

Type	Description	Part No.
EBI 100-T230	Temperature logger, 1-channel, L = 50 mm	1340-6506
EBI 100-T231	Temperature logger, 1-channel, L = 75 mm	1340-6507
EBI 100-T232	Temperature logger, 1-channel, L = 100 mm	1340-6508
EBI 100-T233	Temperature logger, 1-channel, L = 150 mm	1340-6509

EBI 100-T26x Bottle Logger
Rigid metal probe

Please see page 33 for suitable bottle, can and glass adapters.

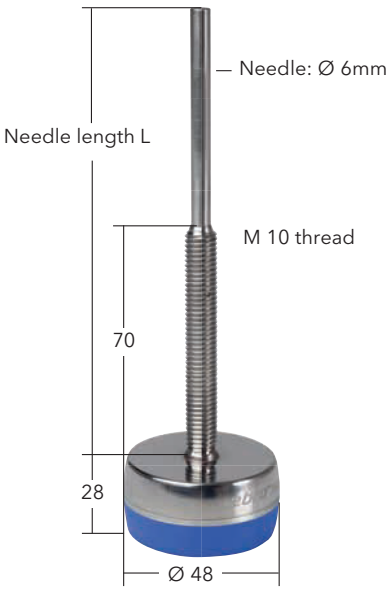

EBI 100-T261

- 1 external temperature sensor, axial, blunt, Ø 6 mm

Technical Data

Measurement range	-40 °C ... +150 °C (-40 °F ... +302 °F)
Data memory	27,000 measurement values

Type	Description	Part No.
EBI 100-T261	Bottle logger, 1-channel, L = 135 mm	1340-6518
EBI 100-T262	Bottle logger, 1-channel, L = 190 mm	1340-6519
EBI 100-T263	Bottle logger, 1-channel, L = 245 mm	1340-6520
EBI 100-T264	Bottle logger, 1-channel, L = 270 mm	1340-6521
EBI 100-T265	Bottle logger, 1-channel, L = 300 mm	1340-6522

EBI 100-T46x Bottle Logger
Rigid metal probes

Please see page 33 for suitable bottle, can and glass adapters.

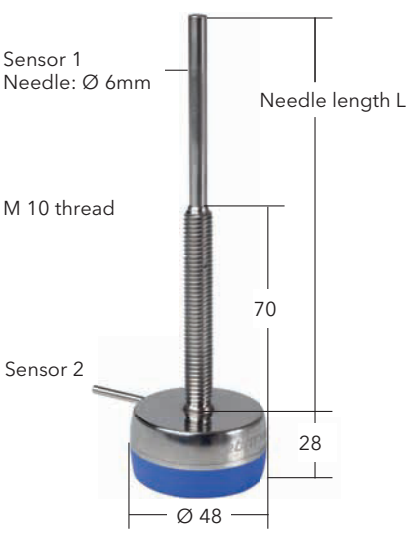

EBI 100-T461

- 2 external temperature sensors, axial and radial, blunt, Ø 6 mm

Technical Data

Measuring range	-40 °C ... +150 °C (-40 °F ... +302 °F)
Data memory	2 x 13,500 measurement values

Type	Description	Part No.
EBI 100-T461	Bottle logger, 2-channel, L = 135 mm	1340-6523
EBI 100-T462	Bottle logger, 2-channel, L = 190 mm	1340-6524
EBI 100-T463	Bottle logger, 2-channel, L = 245 mm	1340-6525
EBI 100-T464	Bottle logger, 2-channel, L = 270 mm	1340-6526
EBI 100-T465	Bottle logger, 2-channel, L = 300 mm	1340-6527

EBI 100-T221 Temperature Data Logger
Bendable metal probe

- 1 external temperature sensor, radial, bendable, blunt, Ø 1.5 mm

Technical Data

Measurement range	-40 °C ... +150 °C (-40 °F ... +302 °F)
Data memory	27,000 measurement values

Type	Description	Part No.
EBI 100-T221	Temperature data logger, 1-channel, L = 500 mm	1340-6505

EBI 100-T241 Temperature Data Logger
Bendable metal probe

- 1 external temperature sensor, axial, bendable, blunt, Ø 1.5 mm

For a suitable silicone protection box, please see page 33.

Technical Data

Measurement range	-40 °C ... +150 °C (-40 °F ... +302 °F)
Data memory	27,000 measurement values

Type	Description	Part No.
EBI 100-T241	Temperature data logger, 1-channel, L = 500 mm	1340-6512

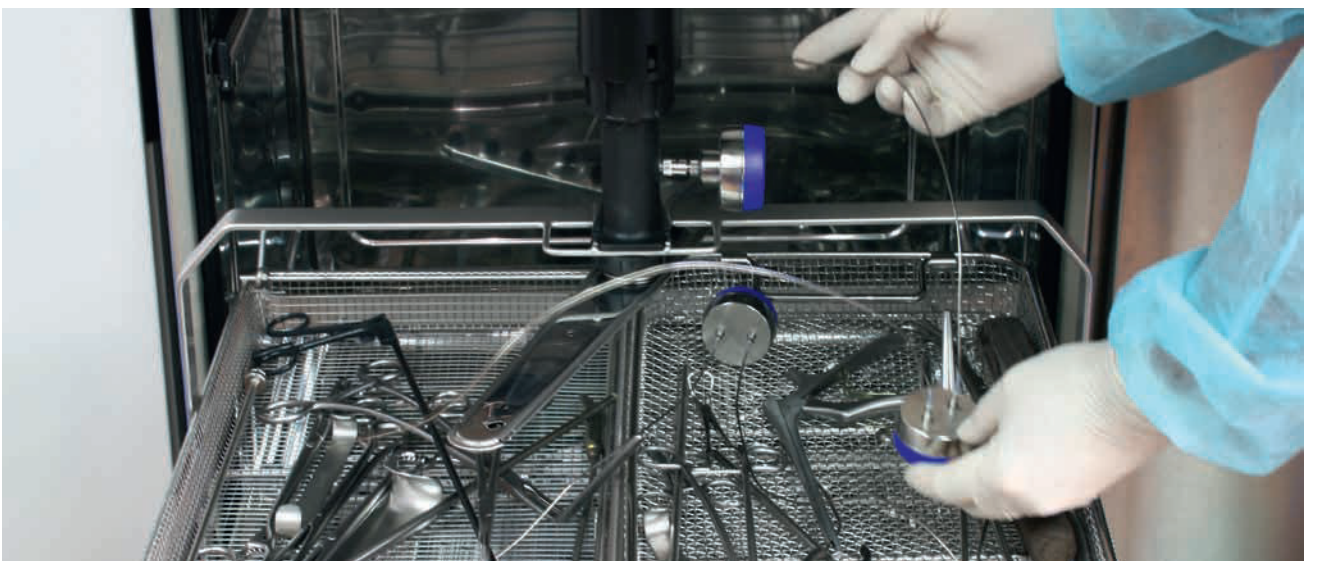

Interfaces and Software Sets for EBI 100

Set SI 1100 for EBI 10, EBI 100 and EBI 11
- 2-port Interface IF 100
- Software Winlog.pro
- USB connection
- Includes antenna

Set SI 1110 for EBI 100 and EBI 11
- 2-port Interface IF 100-1
- Software Winlog.pro
- USB connection

Set SI 1200 for EBI 10 and EBI 100
- 4-port Interface IF 200
- Software Winlog.pro
- USB connection
- Includes antenna

Set SI 2100 for EBI 10, EBI 100 and EBI 11
- 2-port Interface IF 100
- Software Winlog.med
- USB connection
- Includes antenna

Set SI 2110
for EBI 10 and EBI 100
- 4-port Interface IF 200
- Software Winlog.med
- USB connection
- Includes antenna

all Sets: Colored LEDs signaling programming, readout and incorrect development

Please find complete routine control sets on page 49.
For more information about EBI 100 accessories, please see page 33.

Type	Description	Part No.
SI 1100	Set: EBI IF 100 interface and Winlog.pro software	1340-6061
SI 1110	Set: EBI IF 100-1 interface and Winlog.pro software	1340-6561
SI 1200	Set: EBI IF 200 interface and Winlog.pro software	1340-6062
SI 2100	Set: EBI IF 100 interface and Winlog.med sofware	1340-6064
SI 2110	Set: EBI IF 200 interface and Winlog.med software	1340-6095

Accessories for EBI 100

Silicone protection box AL 100
for EBI 100-T241

- Protects temperature logger against heat peaks
- Protects temperature logger against mechanical damage
- Extends the life of temperature data loggers

Ø 78mm, Height: 44mm

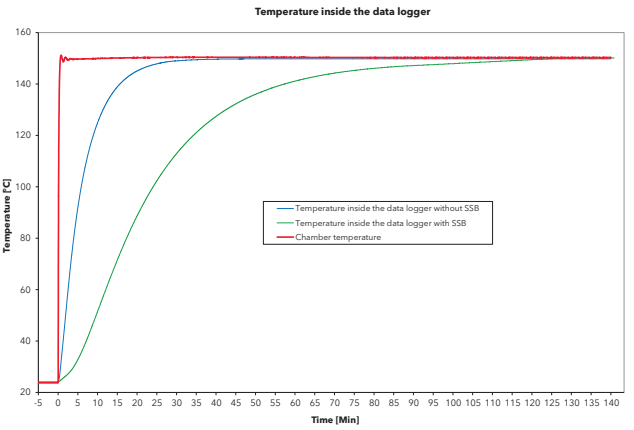

Battery change set AL 103
for EBI 10 and EBI 100
Consisting of 3 batteries, 3 O-rings with grease, cross slot screw driver, silicone grip and silicone protection box cover for battery exchange.

AL 104 Battery Set
for EBI 10 and EBI 100
Consisting of 3 batteries and 4 O-rings with grease.

Can adapter set EBI DA-Set
With this adapter set you can fix the data loggers at cans or plastic bags. Designed for data loggers of the EBI-series with axial, radial or external sensors. Hereby you assure the use to ensure proper sensor placement.

Can adapter EBI DA
for bottle loggers
(*see page 29*)

Bottle adapter EBI FL-S
silicone
for bottle loggers
(*see page 29*)

Grommets for sensor fixing EBI NI-140
Allows precise mounting of the logger sensor in cans and glass.

Compression fitting EBI KV-3
Allows precise mounting of the logger sensor in glass (caps).

Please find complete routine control sets from page 49.

For EBI 100 interfaces and software, please see page 32.

Type	Description	Part No.
AL 100	Silicone protection box	1340-6020
AL 103	Battery change set for EBI 10 and EBI 100	1100-0117
AL 104	Battery set for EBI 10 and EBI 100, 3 batteries	1100-0118
EBI DA	Can adapter for bottle loggers	1340-1963
EBI DA-Set	Can adapter set	1340-1984
EBI FL-S	Bottle adapter, silicone	1340-1961
EBI NI-140	Grommets up to 140 °C / 284 °F (100 pieces)	1340-1988
EBI KV-3	Compression fitting EBI KV-3	1340-2005